H10011.1-04

Others

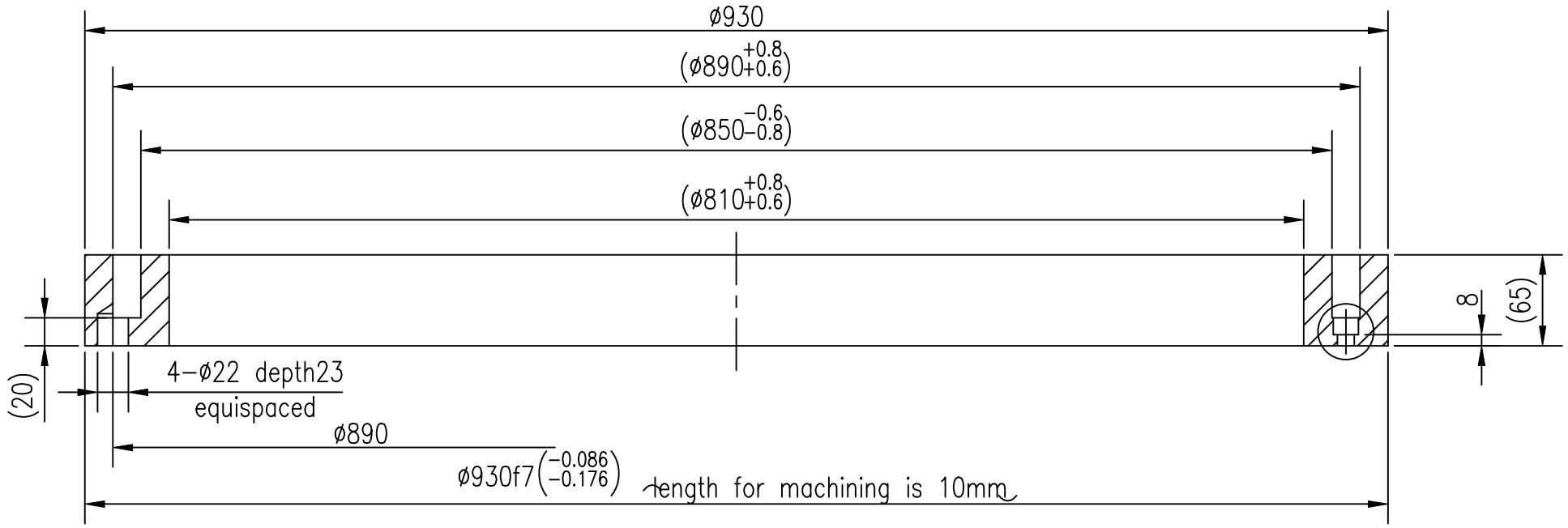

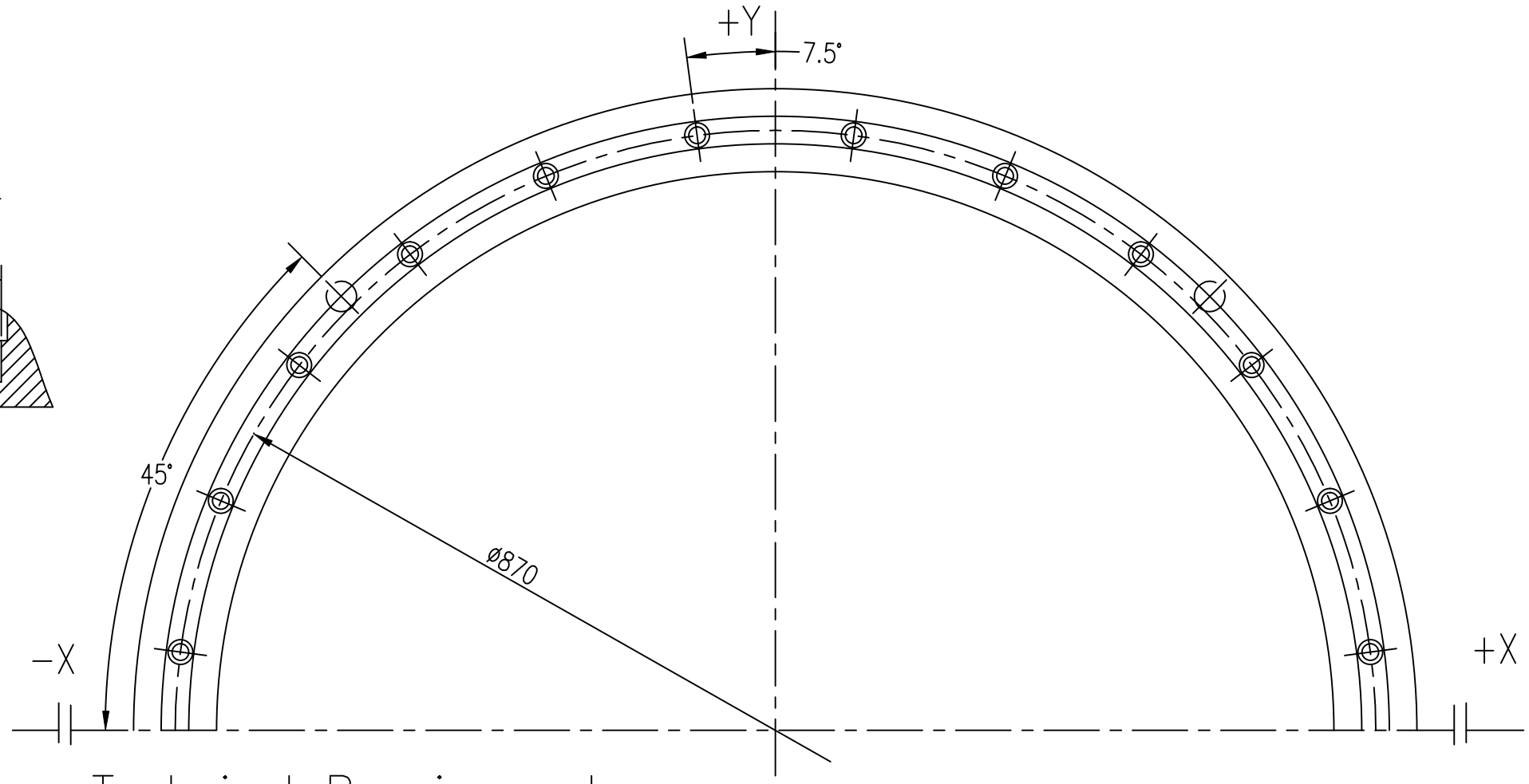

I
1 : 1

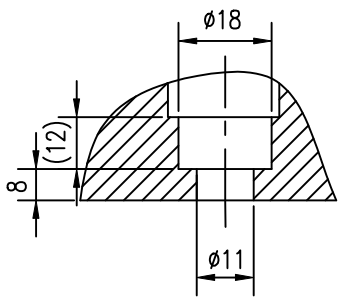

Technical Requirements

1. The casting should measure up GB6967-86°
2. All sharp eadges should be chamferde with 1X45°°
3. The sizes bracketed should keep margin for fine machining of draft connecting tube.

TAG	NUM	FILE-NO	SIGN	DATE
DESIGNED				
CHECKED			APPROVED	
VERIFIED				
			DATE	2011.03

Rear Seal Ring

ZG1Cr18Ni9Ti

H10011.1-04

D-TAG				MASS	RATIO
S	A			63	1:4

OF

ZHEJIANG JINLUN ELECTROMECHANIC CO., LTD

借(通)用件登?	
描	?
描	校
旧底??号	
底??号	
?	字
日	期

H10011.2-03

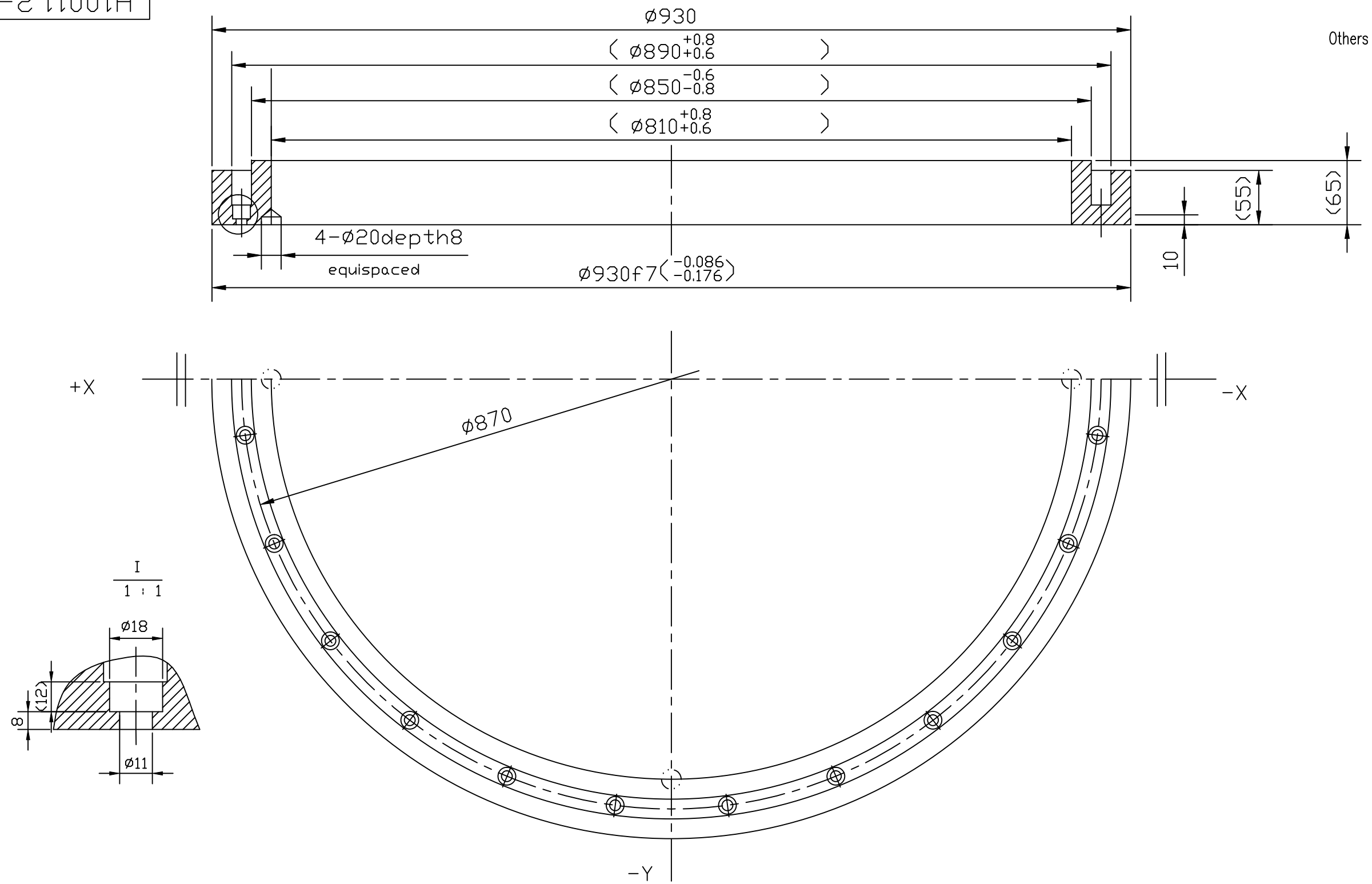

Technical Requirements

1、The left chamfer is 1×45°°

2、The sizes bracketed should keep margin for fine machining of front cover

借(通)用件登?	
描	?
描	校
旧底??号	
底??号	
?	字
日	期

TAG	NUM	FILE-NO	SIGN	DATE
DESIGNED				
CHECKED			APPROVED	
VERIFIED				
			DATE	

Front Seal Ring

ZG1Cr18Ni9Ti

H10011.2-03

D-TAG			MASS	RATIO
S	A		60	1:4

OF

ZHEJIANG JINLUN ELECTROMECHANIC CO., LTD